Model

Designation	**NLE8.0CNT**	**220-230V/50Hz 1~**	**208-230V/60Hz 1~**	Sales code:	**105H6073**

Compressor design

Oil type	Polyolester	Refrigerant(s)	**R290**
Oil viscosity	32cST	Displacement	7,96cm³ / 0,49cu.in
Oil quantity	270cm³ / 9,1fl.oz	Compressors on pallet	80
Refr. charge - tech. limit	150g / 5,3oz		
Free gas volume comp.	2360cm³ / 79,8fl.oz		
Weight	11,1kg / 24,5lbs		
Motor protection	1# internal		
Winding resistance main	7,68Ω (at 25°C)		
Winding resistance aux	13,88Ω (at 25°C)		
Max. winding temp.	125°C / 257°F		
Max. discharge temp.	120°C / 248°F		

General - Configurations with NLE8.0CNT

	Conf. 1	**Conf. 2**	**Conf. 3**	**Conf. 4**	**Conf. 5**
Motorconfiguration	CSIR	RSCR	RSIR	CSIR	RSCR
Power supply (nominal)	208-230V/60Hz	208-230V/60Hz	208-230V/60Hz	220-230V/50Hz	220-230V/50Hz
Number of phases	1	1	1	1	1
Voltage range	187-253V	187-253V	187-253V	187-242V	187-242V
Approvals	UL, CCC	UL, CCC	UL, CCC	UL, CCC	UL, CCC
Starting torque	HST	LST	LST	HST	LST
Note	- / -				

Applications with NLE8.0CNT

	Conf. 1	**Conf. 2**	**Conf. 3**	**Conf. 4**	**Conf. 5**
Refrigerant	R290	R290	R290	R290	R290
Application	LBP+MBP	LBP+MBP	LBP+MBP	LBP+MBP	LBP+MBP
System cooling	fan 3m/s	fan 3m/s	fan 3m/s	fan 3m/s	fan 3m/s
Hot gas defrost	OK	OK	OK	OK	OK
Long interval pull down	OK	OK	OK	OK	OK

Electrical data - Configurations with NLE8.0CNT

	Conf. 1	**Conf. 2**	**Conf. 3**	**Conf. 4**	**Conf. 5**
Starting device type	relay	PTC	PTC	relay	PTC
Run capacitor	-/-	4µF	-/-	-/-	4µF
Start capacitor	60µF	-/-	-/-	60µF	-/-
LRA (locked rotor amps / 4s)	12A	11,8A	11,8A	12,36A	12,4A
RLA (rated load amps / 1s)	2,2A	1,8A	2,2A	2,5A	2,1A
Cut in current	12A	16,4A	16,4A	12,36A	17,1A
IP class	21	21	21	21	21

Model

Designation **NLE8.0CNT** **220-230V/50Hz 1~ 208-230V/60Hz 1~** Sales code: **105H6073**

Compressor dimensions

Housing		
	A Height	203mm / 7,99in
	B Height	197mm / 7,76in
	C Length shell	205mm / 8,07in
	D Length w. cover	254mm / 10in
	E Width	166mm / 6,54in

Connectors		**Suction**	**Discharge**	**Process**
		X	**Y**	**Z**
Diameter	[mm]	øi 8,11-8,29	øi 6,41-6,59	øi 6,41-6,59
(i:inside, o:outside)	[in]	øi 0,32-0,33	øi 0,25-0,26	øi 0,25-0,26
Material		copper	copper	copper
Horizontal angle	±2°	0°	0°	0°
Vertical angle	±2°	15°	21°	155°
Position l/h/w	[mm]	132/69/56	94/99/86	-111/92/72
	[in]	5,2/2,7/2,2	3,7/3,9/3,4	-4,4/3,6/2,8
Straight tube l.	[mm]	12	12	12
	[in]	0,5	0,5	0,5

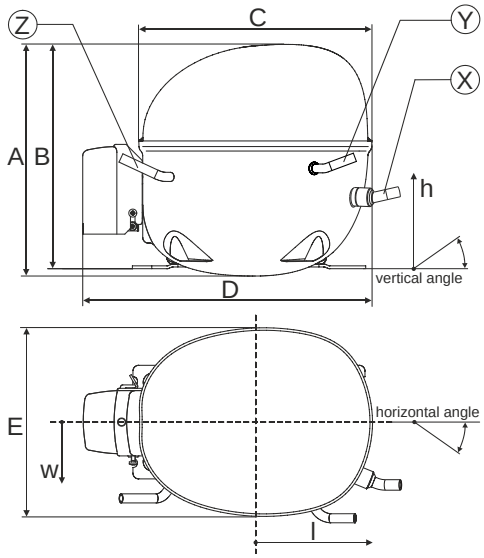

Compressor fixation

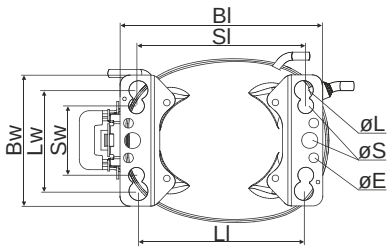

Baseplate	[mm]	[inch]
Bl	204	8.03
Bw	132	5.2
øE	ø 9.7	ø 0.38

Large holes	[mm]	[inch]
Ll	165	6.5
Lw	101.6	4
øL	ø 19	ø 0.75

Small holes	[mm]	[inch]
Sl	170	6.7
Sw	70	2.76
øS	ø 16	ø 0.63

Bolt joint

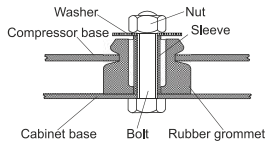

Snap-on

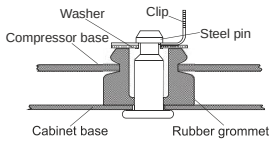

Mounting accessories	one comp.	multi pack
Bolt joint | M6 | ø16mm	118-1917	118-1918
Bolt joint | ø1/4" | ø16mm	118-1946	
Bolt joint | ø1/4" | ø19mm	118-1949	
Snap-on | ø7,3 | ø16mm	118-1947	118-1919

Application notes

LRA value on compressor label and datasheet may differ due to different test conditions for UL approval.

Model

Designation	NLE8.0CNT 208-230V/60Hz	Conf. 1	Sales code:	105H6073

Configuration

Motorconfiguration	CSIR
Power supply (nominal)	208-230V/60Hz 1~
Refrigerant	R290
Application	LBP+MBP
Voltage range	187-253V
Starting torque	HST
Approvals	UL SA3693
	CCC

Electrical accessories / wiring diagram

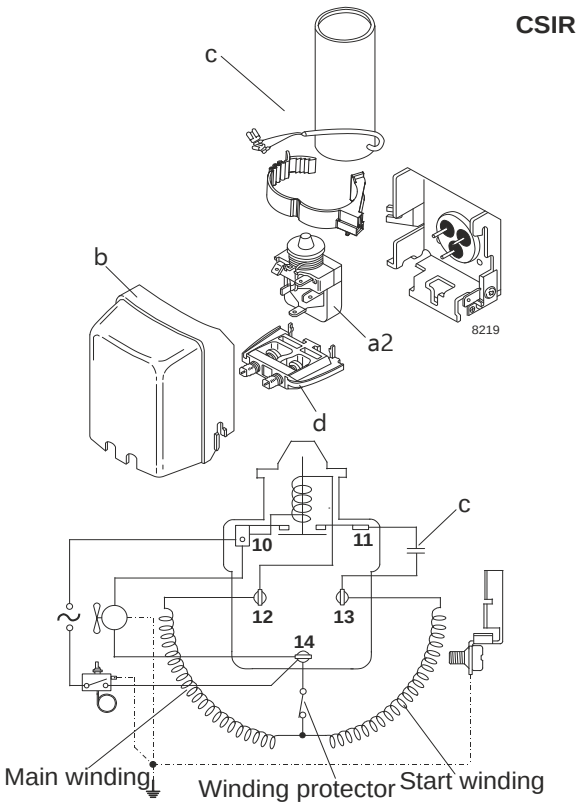

Ambient temperatures / system cooling

Ambient temperature min.:	10°C / 50°F
Ambient temperature max.:	43°C / 110°F

System cooling (n/a: outside limits)			
T ambient	LBP	MBP	HBP
32°C / 90°F	fan 3m/s	fan 3m/s	n/a
38°C / 100°F	fan 3m/s	fan 3m/s	n/a
43°C / 110°F	fan 3m/s	fan 3m/s	n/a

Operation pressure range

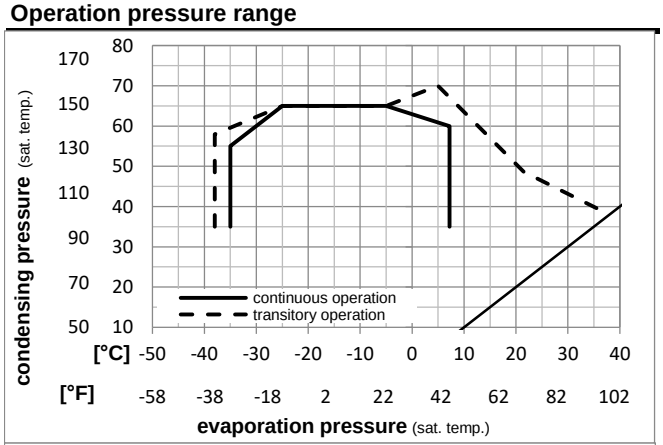

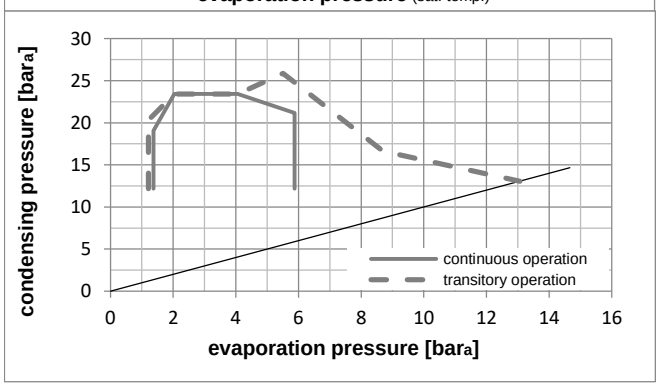

Components

a2	relay	117U7003
c	start capacitor (60µF)	117U5014
b	plastic cover	103N2011
d	cord relief	103N1010

Alternative components

b	plastic cover	103N2010

Model

Designation **NLE8.0CNT 208-230V/60Hz** **Conf. 1** Sales code: **105H6073**

Optimization + standard conditions 220V/60Hz, CSIR, fan 3m/s, UL, CCC

	Evaporating pressure (saturation temperature) pe	Condensing pressure (saturation temperature) pc	Return gas temp. RGT	Liquid temp. Tliq	Cooling capacity [W]	[Btu/h]	[kcal/h]	COP [W/W]	EER [Btu/Wh]	[kcal/Wh]	Power consumption P1 [W]	Current consumption I [A]	Ref. mass flow ṁ [kg/h]	
[°C]	-23,3	54,4	32,2	32,2	440,3	1504	379,0	1,52	5,18	1,30	290,4	1,75	4,46	**ASHRAE LBP**
[°F]	-10	130	90	90										
[°C]	-25	55	32	55	326,2	1114	280,7	1,17	4,01	1,01	277,9	1,72	4,06	**cecomaf LBP**
[°F]	-13	131	89,6	131										
[°C]	-35	40	20	40	244,3	834	210,2	1,20	4,10	1,03	203,3	1,53	2,79	**EN12900 LBP**
[°F]	-31	104	68	104										
[°C]	-6,66	54,4	35	46,1	809,3	2764	696,5	2,04	6,96	1,75	396,9	2,10	9,23	**ASHRAE MBP**
[°F]	20	130	95	115										
[°C]	-10	55	32	55	640,8	2188	551,5	1,69	5,76	1,45	379,7	2,04	8,11	**cecomaf MBP**
[°F]	14	131	89,6	131										
[°C]	-10	45	20	45	717,6	2451	617,5	2,10	7,18	1,81	341,3	1,92	8,81	**EN12900 MBP**
[°F]	14	113	68	113										

Performance tables 220V/60Hz, CSIR, fan 3m/s, UL, CCC

	pe [°C]	[°F]	Cooling capacity [W]	[Btu/h]	[kcal/h]	COP [W/W]	EER [Btu/Wh]	[kcal/Wh]	P1 [W]	I [A]	m [kg/h]
[°C / °F]	-35	-31	228,7	781	196,8	1,10	3,77	0,95	207,4	1,54	2,56
cond. pressure	-23,3	-10	428,2	1462	368,5	1,55	5,31	1,34	275,4	1,71	4,84
pc= 45/113	-15	5	613,6	2096	528,1	1,93	6,58	1,66	318,5	1,84	6,98
return gas temp.	-9,4	15	763,0	2606	656,6	2,22	7,58	1,91	343,7	1,92	8,73
RGT= 32/90	-3,9	25	936,6	3199	806,1	2,56	8,76	2,21	365,3	2,00	10,80
liquid temp	0	32	1074,2	3669	924,5	2,84	9,70	2,45	378,0	2,05	12,46
Tliq= 45/113	7,2	45	1368,9	4675	1178,1	3,46	11,81	2,98	395,7	2,13	16,08
[°C / °F]	-35	-31	171,3	585	147,4	0,86	2,94	0,74	198,9	1,52	2,12
cond. pressure	-23,3	-10	355,5	1214	306,0	1,22	4,18	1,05	290,4	1,75	4,43
pc= 55/131	-15	5	522,0	1783	449,2	1,50	5,11	1,29	348,6	1,93	6,56
return gas temp	-9,4	15	655,0	2237	563,7	1,71	5,84	1,47	383,0	2,05	8,29
RGT= 32/90	-3,9	25	809,3	2764	696,5	1,96	6,69	1,69	413,3	2,16	10,33
liquid temp	0	32	931,6	3182	801,8	2,16	7,37	1,86	431,7	2,23	11,97
Tliq= 55/131	7,2	45	1194,1	4078	1027,7	2,60	8,88	2,24	459,2	2,35	15,56

Model

Designation	NLE8.0CNT 208-230V/60Hz	Conf. 2	Sales code:	105H6073

Configuration

Motorconfiguration	RSCR
Power supply (nominal)	208-230V/60Hz 1~
Refrigerant	R290
Application	LBP+MBP
Voltage range	187-253V
Starting torque	LST
Approvals	UL SA3693
	CCC

Electrical accessories / wiring diagram

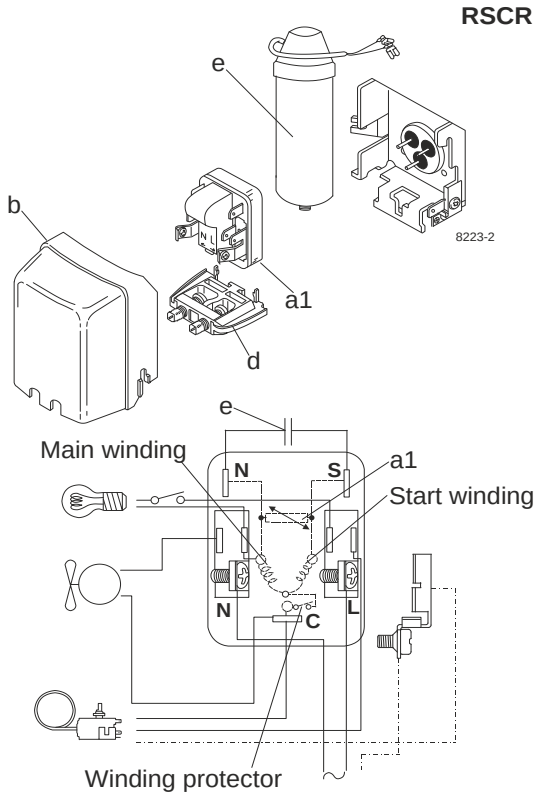

Components

a1	e-PTC starter (220V, 25Ohm, 4.8mm)	103N0050
e	run capacitor (4µF, 4.8mm)	117-7119
b	plastic cover	103N2011
d	cord relief	103N1010
	bracket for run capacitor	117-0300
	screw M4x8mm	117-0301

Ambient temperatures / system cooling

Ambient temperature min.:	10°C / 50°F
Ambient temperature max.:	43°C / 110°F

System cooling (n/a: outside limits)			
T ambient	LBP	MBP	HBP
32°C / 90°F	fan 3m/s	fan 3m/s	n/a
38°C / 100°F	fan 3m/s	fan 3m/s	n/a
43°C / 110°F	fan 3m/s	fan 3m/s	n/a

Operation pressure range

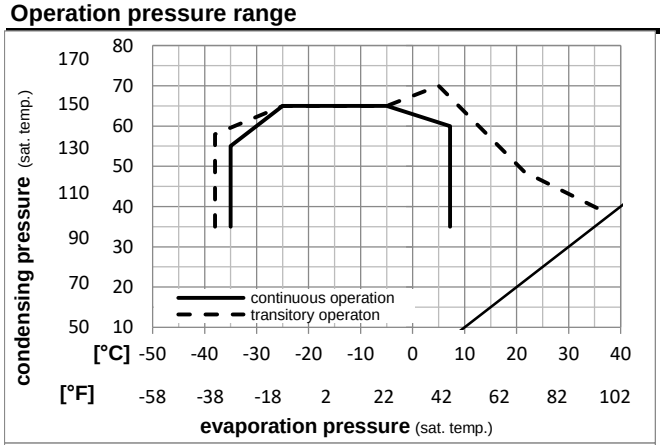

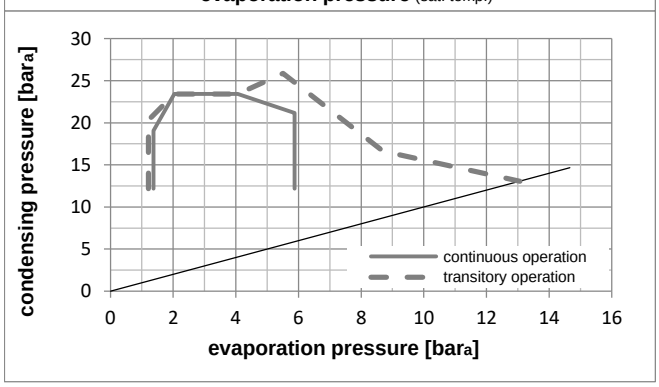

Model

Designation **NLE8.0CNT 208-230V/60Hz** **Conf. 2** Sales code: **105H6073**

Optimization + standard conditions 220V/60Hz, RSCR, fan 3m/s, UL, CCC

	Evaporating pressure (saturation temperature) pe	Condensing pressure (saturation temperature) pc	Return gas temp. RGT	Liquid temp. Tliq	Cooling capacity [W]	[Btu/h]	[kcal/h]	COP [W/W]	EER [Btu/Wh]	[kcal/Wh]	Power consumption P1 [W]	Current consumption I [A]	Ref. mass flow ṁ [kg/h]	
[°C]	-23,3	54,4	32,2	32,2	441,5	1508	380,0	1,63	5,57	1,40	270,9	1,33	4,47	**ASHRAE LBP**
[°F]	-10	130	90	90										
[°C]	-25	55	32	55	327,0	1117	281,5	1,26	4,31	1,09	259,3	1,28	4,07	**cecomaf LBP**
[°F]	-13	131	89,6	131										
[°C]	-35	40	20	40	244,7	836	210,6	1,29	4,41	1,11	189,4	1,00	2,80	**EN12900 LBP**
[°F]	-31	104	68	104										
[°C]	-6,66	54,4	35	46,1	812,9	2776	699,6	2,20	7,53	1,90	368,9	1,73	9,27	**ASHRAE MBP**
[°F]	20	130	95	115										
[°C]	-10	55	32	55	643,4	2197	553,8	1,82	6,22	1,57	353,1	1,67	8,14	**cecomaf MBP**
[°F]	14	131	89,6	131										
[°C]	-10	45	20	45	720,0	2459	619,7	2,26	7,73	1,95	318,0	1,49	8,84	**EN12900 MBP**
[°F]	14	113	68	113										

Performance tables 220V/60Hz, RSCR, fan 3m/s, UL, CCC

	pe [°C]	[°F]	Cooling capacity [W]	[Btu/h]	[kcal/h]	COP [W/W]	EER [Btu/Wh]	[kcal/Wh]	P1 [W]	I [A]	m [kg/h]
[°C / °F]	-35	-31	229,1	783	197,2	1,19	4,05	1,02	193,2	1,02	2,57
cond. pressure	-23,3	-10	429,2	1466	369,4	1,67	5,70	1,44	257,0	1,27	4,85
pc= 45/113	-15	5	615,5	2102	529,7	2,07	7,08	1,78	297,0	1,42	7,00
return gas temp.	-9,4	15	765,7	2615	658,9	2,39	8,17	2,06	320,2	1,50	8,77
RGT= 32/90	-3,9	25	940,2	3211	809,1	2,76	9,44	2,38	340,1	1,57	10,84
liquid temp	0	32	1078,5	3683	928,2	3,07	10,47	2,64	351,7	1,62	12,51
Tliq= 45/113	7,2	45	1374,7	4695	1183,1	3,74	12,76	3,22	367,9	1,67	16,15
[°C / °F]	-35	-31	171,8	587	147,8	0,93	3,16	0,80	185,7	0,97	2,12
cond. pressure	-23,3	-10	356,5	1217	306,8	1,32	4,49	1,13	270,8	1,33	4,44
pc= 55/131	-15	5	523,8	1789	450,8	1,61	5,51	1,39	324,5	1,55	6,59
return gas temp	-9,4	15	657,7	2246	566,1	1,85	6,31	1,59	356,1	1,68	8,33
RGT= 32/90	-3,9	25	813,1	2777	699,8	2,12	7,24	1,82	383,8	1,79	10,38
liquid temp	0	32	936,3	3197	805,8	2,34	7,98	2,01	400,5	1,86	12,03
Tliq= 55/131	7,2	45	1200,5	4100	1033,1	2,82	9,64	2,43	425,4	1,95	15,64

Model

Designation	NLE8.0CNT 208-230V/60Hz	Conf. 3	Sales code:	105H6073

Configuration

Motorconfiguration	RSIR
Power supply (nominal)	208-230V/60Hz 1~
Refrigerant	R290
Application	LBP+MBP
Voltage range	187-253V
Starting torque	LST
Approvals	UL SA3693
	CCC

Electrical accessories / wiring diagram

RSIR

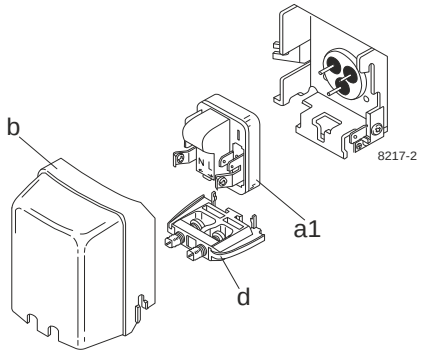

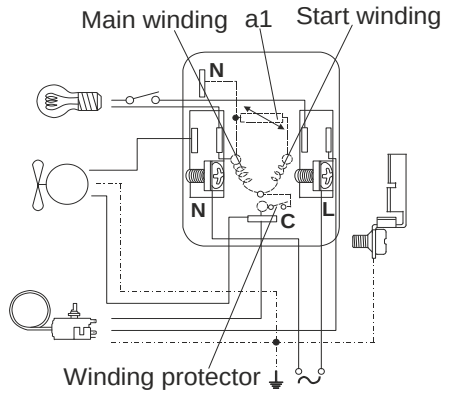

Ambient temperatures / system cooling

Ambient temperature min.:	10°C / 50°F
Ambient temperature max.:	43°C / 110°F

System cooling (n/a: outside limits)			
T ambient	LBP	MBP	HBP
32°C / 90°F	fan 3m/s	fan 3m/s	n/a
38°C / 100°F	fan 3m/s	fan 3m/s	n/a
43°C / 110°F	fan 3m/s	fan 3m/s	n/a

Operation pressure range

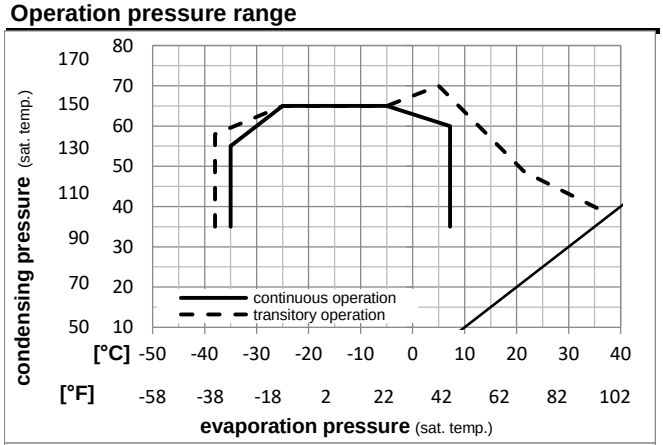

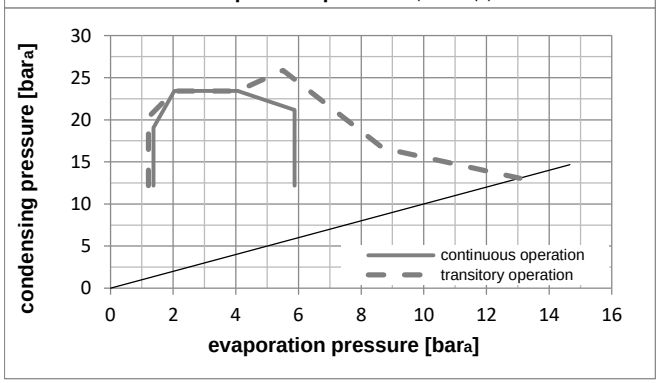

Components

a1	e-PTC starter (220V, 25Ohm, 4.8mm)	103N0050
b	plastic cover	103N2011
d	cord relief	103N1010

Model

Designation **NLE8.0CNT 208-230V/60Hz** **Conf. 3** Sales code: **105H6073**

Optimization + standard conditions 220V/60Hz, RSIR, fan 3m/s, UL, CCC

	Evaporating pressure (saturation temperature)	Condensing pressure (saturation temperature)	Return gas temp.	Liquid temp.	Cooling capacity			COP	EER		Power consumption	Current consumption	Ref. mass flow	
	pe	pc	RGT	Tliq	[W]	[Btu/h]	[kcal/h]	[W/W]	[Btu/Wh]	[kcal/Wh]	P1 [W]	I [A]	ṁ [kg/h]	
[°C]	-23,3	54,4	32,2	32,2	440,3	1504	379,0	1,52	5,18	1,30	290,4	1,75	4,46	**ASHRAE LBP**
[°F]	-10	130	90	90										
[°C]	-25	55	32	55	326,2	1114	280,7	1,17	4,01	1,01	277,9	1,72	4,06	**cecomaf LBP**
[°F]	-13	131	89,6	131										
[°C]	-35	40	20	40	244,3	834	210,2	1,20	4,10	1,03	203,3	1,53	2,79	**EN12900 LBP**
[°F]	-31	104	68	104										
[°C]	-6,66	54,4	35	46,1	809,3	2764	696,5	2,04	6,96	1,75	396,9	2,10	9,23	**ASHRAE MBP**
[°F]	20	130	95	115										
[°C]	-10	55	32	55	640,8	2188	551,5	1,69	5,76	1,45	379,7	2,04	8,11	**cecomaf MBP**
[°F]	14	131	89,6	131										
[°C]	-10	45	20	45	717,6	2451	617,5	2,10	7,18	1,81	341,3	1,92	8,81	**EN12900 MBP**
[°F]	14	113	68	113										

Performance tables 220V/60Hz, RSIR, fan 3m/s, UL, CCC

	pe [°C]	[°F]	Cooling capacity [W]	[Btu/h]	[kcal/h]	COP [W/W]	EER [Btu/Wh]	[kcal/Wh]	P1 [W]	I [A]	m [kg/h]
[°C / °F]	-35	-31	228,7	781	196,8	1,10	3,77	0,95	207,4	1,54	2,56
cond. pressure	-23,3	-10	428,2	1462	368,5	1,55	5,31	1,34	275,4	1,71	4,84
pc= 45/113	-15	5	613,6	2096	528,1	1,93	6,58	1,66	318,5	1,84	6,98
return gas temp.	-9,4	15	763,0	2606	656,6	2,22	7,58	1,91	343,7	1,92	8,73
RGT= 32/90	-3,9	25	936,6	3199	806,1	2,56	8,76	2,21	365,3	2,00	10,80
liquid temp	0	32	1074,2	3669	924,5	2,84	9,70	2,45	378,0	2,05	12,46
Tliq= 45/113	7,2	45	1368,9	4675	1178,1	3,46	11,81	2,98	395,7	2,13	16,08
[°C / °F]	-35	-31	171,3	585	147,4	0,86	2,94	0,74	198,9	1,52	2,12
cond. pressure	-23,3	-10	355,5	1214	306,0	1,22	4,18	1,05	290,4	1,75	4,43
pc= 55/131	-15	5	522,0	1783	449,2	1,50	5,11	1,29	348,6	1,93	6,56
return gas temp	-9,4	15	655,0	2237	563,7	1,71	5,84	1,47	383,0	2,05	8,29
RGT= 32/90	-3,9	25	809,3	2764	696,5	1,96	6,69	1,69	413,3	2,16	10,33
liquid temp	0	32	931,6	3182	801,8	2,16	7,37	1,86	431,7	2,23	11,97
Tliq= 55/131	7,2	45	1194,1	4078	1027,7	2,60	8,88	2,24	459,2	2,35	15,56

Model

Designation	NLE8.0CNT 220-230V/50Hz	Conf. 4	Sales code:	105H6073

Configuration

Motorconfiguration	CSIR
Power supply (nominal)	220-230V/50Hz 1~
Refrigerant	R290
Application	LBP+MBP
Voltage range	187-242V
Starting torque	HST
Approvals	UL SA3693
	CCC

Electrical accessories / wiring diagram

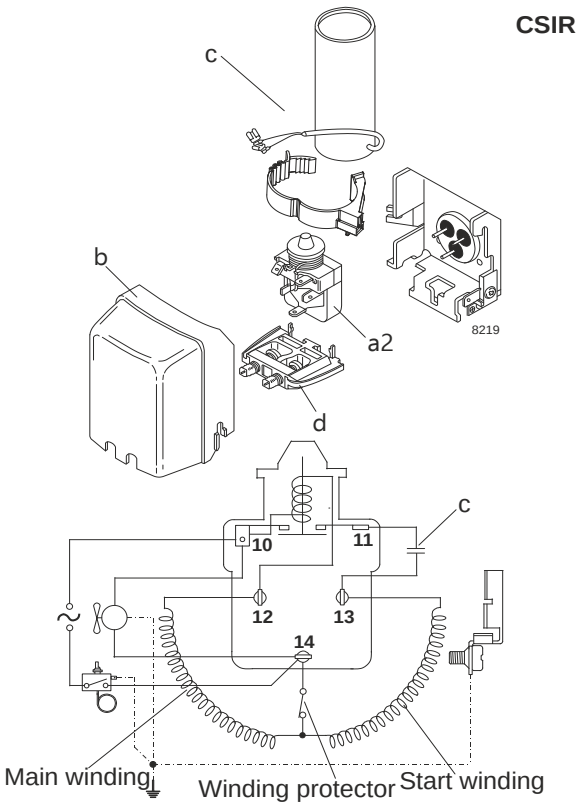

Ambient temperatures / system cooling

Ambient temperature min.:	10°C / 50°F
Ambient temperature max.:	43°C / 110°F

System cooling (n/a: outside limits)

T ambient	LBP	MBP	HBP
32°C / 90°F	fan 3m/s	fan 3m/s	n/a
38°C / 100°F	fan 3m/s	fan 3m/s	n/a
43°C / 110°F	fan 3m/s	fan 3m/s	n/a

Operation pressure range

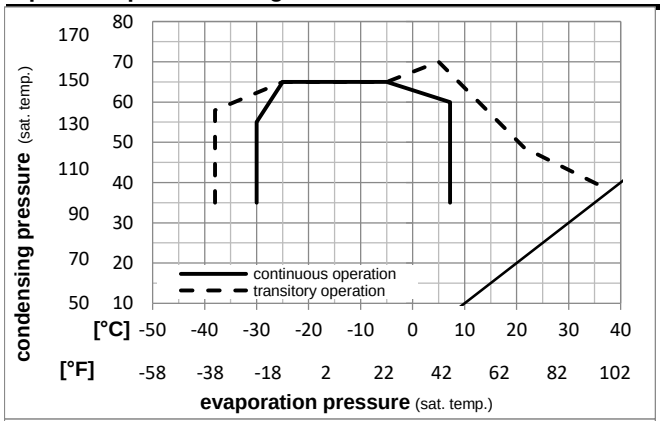

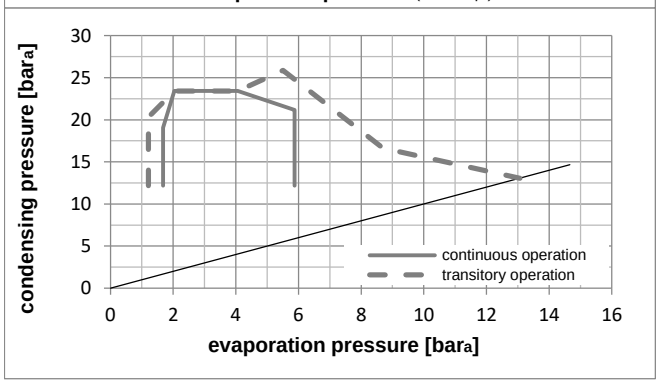

Components

a2	relay	117U7003
c	start capacitor (60µF)	117U5014
b	plastic cover	103N2011
d	cord relief	103N1010

Alternative components

b	plastic cover	103N2010

Model

Designation **NLE8.0CNT 220-230V/50Hz** **Conf. 4** Sales code: **105H6073**

Optimization + standard conditions 220V/50Hz, CSIR, fan 3m/s, UL, CCC

	Evaporating pressure (saturation temperature) pe	Condensing pressure (saturation temperature) pc	Return gas temp. RGT	Liquid temp. Tliq	Cooling capacity [W]	[Btu/h]	[kcal/h]	COP [W/W]	EER [Btu/Wh]	[kcal/Wh]	Power consumption P1 [W]	Current consumption I [A]	Ref. mass flow ṁ [kg/h]	
[°C]	-23,3	54,4	32,2	32,2	376,3	1285	323,8	1,45	4,94	1,25	260,0	1,99	3,81	**ASHRAE LBP**
[°F]	-10	130	90	90										
[°C]	-25	55	32	55	278,7	952	239,8	1,11	3,80	0,96	250,2	1,96	3,47	**cecomaf LBP**
[°F]	-13	131	89,6	131										
[°C]	-35	40	20	40	208,5	712	179,5	1,09	3,74	0,94	190,5	1,81	2,38	**EN12900 LBP**
[°F]	-31	104	68	104										
[°C]	-6,66	54,4	35	46,1	692,8	2366	596,2	2,02	6,89	1,74	343,6	2,20	7,90	**ASHRAE MBP**
[°F]	20	130	95	115										
[°C]	-10	55	32	55	548,4	1873	471,9	1,66	5,67	1,43	330,2	2,16	6,94	**cecomaf MBP**
[°F]	14	131	89,6	131										
[°C]	-10	45	20	45	613,6	2096	528,1	2,04	6,98	1,76	300,1	2,05	7,53	**EN12900 MBP**
[°F]	14	113	68	113										

Performance tables 220V/50Hz, CSIR, fan 3m/s, UL, CCC

	pe [°C]	[°F]	Cooling capacity [W]	[Btu/h]	[kcal/h]	COP [W/W]	EER [Btu/Wh]	[kcal/Wh]	P1 [W]	I [A]	m [kg/h]
[°C / °F]	-30	-22	262,2	896	225,7	1,20	4,11	1,04	217,9	1,87	2,95
cond. pressure	-23,3	-10	365,8	1249	314,8	1,47	5,03	1,27	248,1	1,93	4,13
pc= 45/113	-15	5	524,5	1791	451,4	1,86	6,35	1,60	282,2	2,01	5,97
return gas temp.	-9,4	15	652,5	2228	561,5	2,16	7,38	1,86	302,0	2,06	7,47
RGT= 32/90	-3,9	25	801,2	2736	689,5	2,51	8,58	2,16	318,9	2,10	9,24
liquid temp	0	32	919,1	3139	791,0	2,80	9,55	2,41	328,8	2,13	10,66
Tliq= 45/113	7,2	45	1171,5	4001	1008,2	3,42	11,68	2,94	342,6	2,17	13,76
[°C / °F]	-30	-22	209,1	714	179,9	0,95	3,25	0,82	219,5	1,90	2,59
cond. pressure	-23,3	-10	303,8	1037	261,4	1,17	3,99	1,01	260,0	1,99	3,79
pc= 55/131	-15	5	446,4	1525	384,2	1,46	4,99	1,26	305,8	2,10	5,61
return gas temp	-9,4	15	560,5	1914	482,4	1,68	5,75	1,45	332,7	2,17	7,10
RGT= 32/90	-3,9	25	693,0	2367	596,4	1,94	6,64	1,67	356,3	2,24	8,84
liquid temp	0	32	797,9	2725	686,7	2,15	7,35	1,85	370,7	2,28	10,25
Tliq= 55/131	7,2	45	1023,2	3494	880,5	2,61	8,92	2,25	391,9	2,35	13,33

Model

Designation	NLE8.0CNT 220-230V/50Hz	Conf. 5	Sales code:	105H6073

Configuration

Motorconfiguration	RSCR
Power supply (nominal)	220-230V/50Hz 1~
Refrigerant	R290
Application	LBP+MBP
Voltage range	187-242V
Starting torque	LST
Approvals	UL SA3693
	CCC

Electrical accessories / wiring diagram

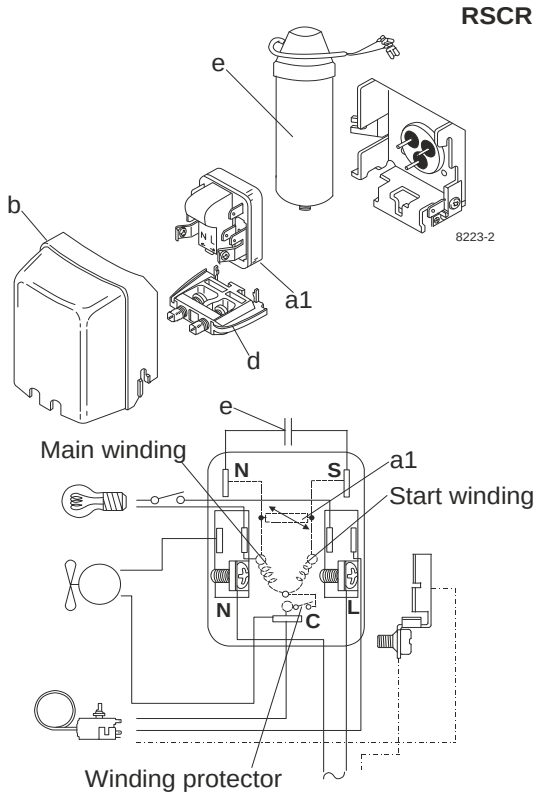

Ambient temperatures / system cooling

Ambient temperature min.:	10°C / 50°F
Ambient temperature max.:	43°C / 110°F

System cooling (n/a: outside limits)			
T ambient	LBP	MBP	HBP
32°C / 90°F	fan 3m/s	fan 3m/s	n/a
38°C / 100°F	fan 3m/s	fan 3m/s	n/a
43°C / 110°F	fan 3m/s	fan 3m/s	n/a

Operation pressure range

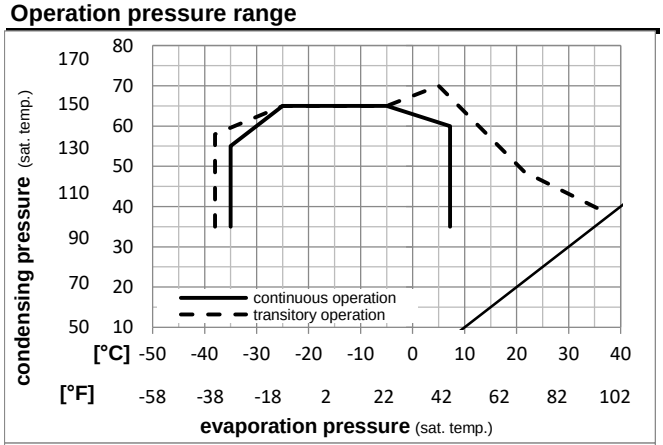

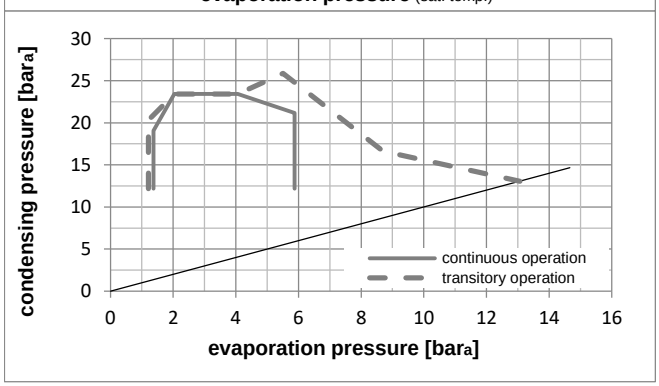

Components

a1	e-PTC starter (220V, 25Ohm, 4.8mm)	103N0050
e	run capacitor (4µF, 4.8mm)	117-7119
b	plastic cover	103N2011
d	cord relief	103N1010
	bracket for run capacitor	117-0300
	screw M4x8mm	117-0301

Model

Designation **NLE8.0CNT 220-230V/50Hz** **Conf. 5** Sales code: **105H6073**

Optimization + standard conditions 220V/50Hz, RSCR, fan 3m/s, UL, CCC

	Evaporating pressure (saturation temperature) pe	Condensing pressure (saturation temperature) pc	Return gas temp. RGT	Liquid temp. Tliq	Cooling capacity [W]	[Btu/h]	[kcal/h]	COP [W/W]	EER [Btu/Wh]	[kcal/Wh]	Power consumption P1 [W]	Current consumption I [A]	Ref. mass flow ṁ [kg/h]	
[°C]	-23,3	54,4	32,2	32,2	376,9	1287	324,3	1,55	5,30	1,34	242,7	1,56	3,82	**ASHRAE LBP**
[°F]	-10	130	90	90										
[°C]	-25	55	32	55	279,1	953	240,2	1,20	4,08	1,03	233,4	1,53	3,48	**cecomaf LBP**
[°F]	-13	131	89,6	131										
[°C]	-35	40	20	40	208,7	713	179,6	1,18	4,02	1,01	177,2	1,37	2,38	**EN12900 LBP**
[°F]	-31	104	68	104										
[°C]	-6,66	54,4	35	46,1	694,5	2372	597,7	2,16	7,38	1,86	321,6	1,81	7,92	**ASHRAE MBP**
[°F]	20	130	95	115										
[°C]	-10	55	32	55	549,6	1877	473,0	1,78	6,08	1,53	308,9	1,77	6,95	**cecomaf MBP**
[°F]	14	131	89,6	131										
[°C]	-10	45	20	45	614,8	2100	529,1	2,19	7,47	1,88	280,9	1,64	7,55	**EN12900 MBP**
[°F]	14	113	68	113										

Performance tables 220V/50Hz, RSCR, fan 3m/s, UL, CCC

	pe [°C]	[°F]	Cooling capacity [W]	[Btu/h]	[kcal/h]	COP [W/W]	EER [Btu/Wh]	[kcal/Wh]	P1 [W]	I [A]	m [kg/h]
[°C / °F]	-35	-31	195,5	668	168,3	1,08	3,70	0,93	180,3	1,39	2,19
cond. pressure	-23,3	-10	366,3	1251	315,2	1,58	5,40	1,36	231,7	1,50	4,14
pc= 45/113	-15	5	525,4	1794	452,2	1,99	6,80	1,71	264,0	1,58	5,98
return gas temp.	-9,4	15	653,8	2233	562,6	2,31	7,90	1,99	282,7	1,64	7,48
RGT= 32/90	-3,9	25	802,9	2742	691,0	2,69	9,18	2,31	298,8	1,70	9,26
liquid temp	0	32	921,2	3146	792,8	2,99	10,21	2,57	308,2	1,73	10,68
Tliq= 45/113	7,2	45	1174,3	4010	1010,6	3,66	12,48	3,15	321,2	1,77	13,80
[°C / °F]	-35	-31	146,6	501	126,2	0,84	2,88	0,72	174,2	1,38	1,81
cond. pressure	-23,3	-10	304,3	1039	261,8	1,25	4,28	1,08	242,7	1,55	3,79
pc= 55/131	-15	5	447,4	1528	385,0	1,56	5,34	1,35	285,9	1,69	5,62
return gas temp	-9,4	15	561,9	1919	483,6	1,81	6,16	1,55	311,3	1,78	7,11
RGT= 32/90	-3,9	25	694,8	2373	597,9	2,08	7,11	1,79	333,5	1,85	8,87
liquid temp	0	32	800,2	2733	688,6	2,31	7,88	1,98	347,0	1,90	10,28
Tliq= 55/131	7,2	45	1026,2	3505	883,2	2,80	9,55	2,41	366,9	1,97	13,37